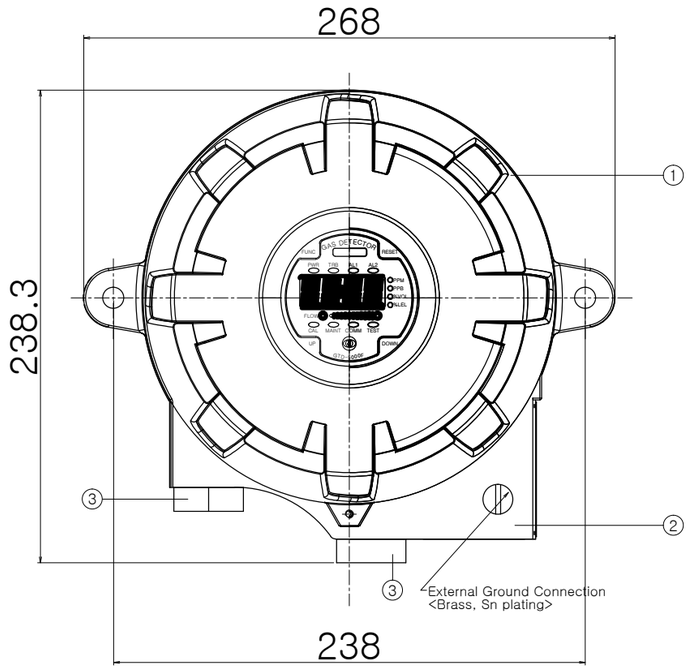

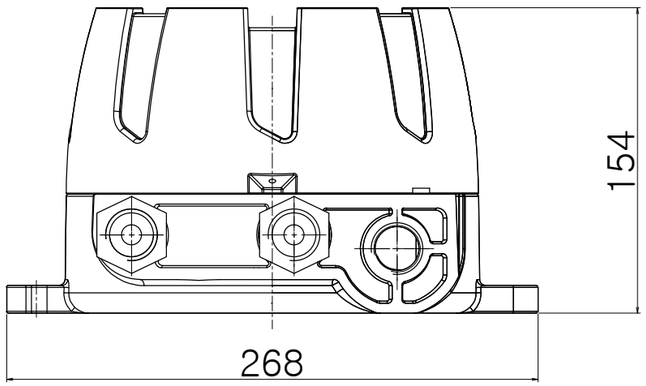

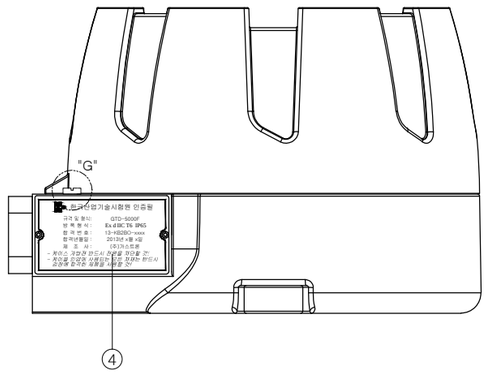

No.	Description	Material	Q'ty	Part No.
1	GDH-5000F COVER	ALDC12	1	-
2	GDH-5000F BODY	ALDC12	1	-
3	SHAFT ASS"Y	SUS 304	2	-
4	STANDARD NAME PLATE	SUS 316	1	-

< GENERAL DESCRIPTION >

- Approval : Ex d IIC T6 IP65
- Temp : -40°C ~ +60°C
- Operating Voltage: 24VDC / 600mA Max.

CONDUIT THREAD

D1	L1 (mm)
G1/2"	≥20
G3/4"	
R(Rc)1/2"	~14 5 Full threads
R(Rc)3/4"	
1/2"NPT	
3/4"NPT	

GASTRON CO.,LTD.

Title	GTD-5000F		
Project No.	-		
Part No.	-		
Material	-	**Scale**	1/1
Pro-jection		**Units**	mm
DWG. No.		**Rev.**	0

Rev.	Description	Date	Drawn	Checked	Approved
3					
2					
1					
0					